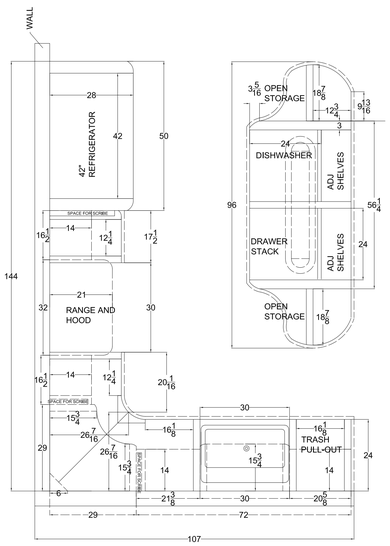

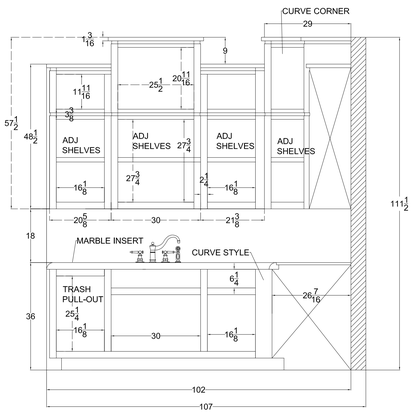

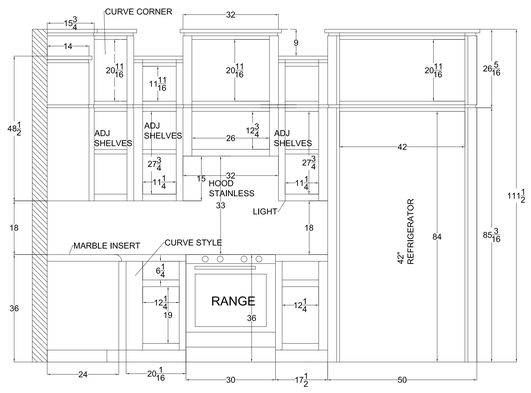

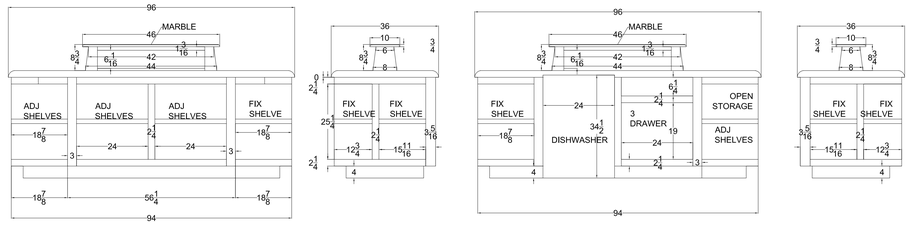

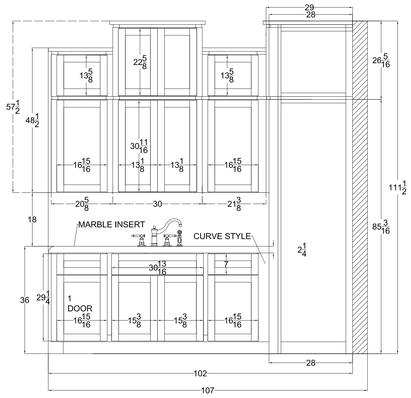

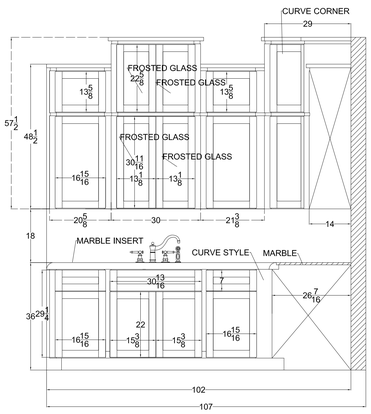

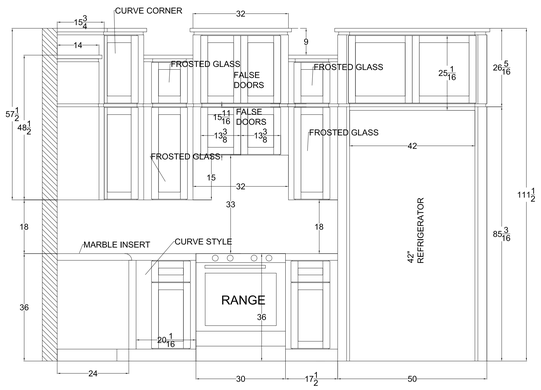

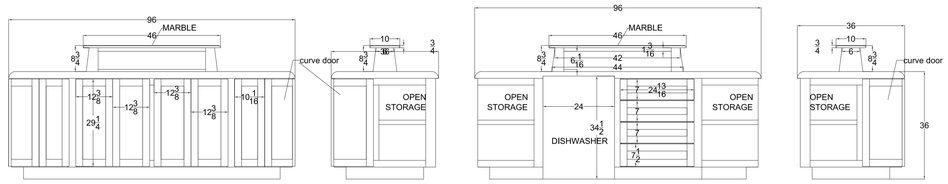

TradUR Company Kitchen Designs
Custom Made Furniture
wholesale@tradur.com
http://www.tradur.com - USA and Western Europe
http://cabinetglobal.com
http://oldworldmasters.net
http://urbanikas.com - Poland and Eastern Europe

C.V. Architectural Manufacturing
Tegal Sambi RT01 RW01 Jepara, Indonesia 59425
wholesale@tradur.com
(62) 85865670655 - Glenn Madden, Asia Regional Director
(62) 85290252189 - Zaenal, Designer
(62) 81325927775 - Teti Mutia, General Manager
From The USA Call Toll Free 1 800 774 3959